Lecture 9 | Modeling Electroplating: Current Distribution and Coating Uniformity

Al-Farabi Kazakh National University

Department of Analytical, Colloidal Chemistry and Technology of Rare Elements

Discipline: Modeling in Electrochemistry

Educational program: 7M07103 Chemical Engineering

Lecturer: Khaisa Avchukir, PhD, Associate Professor

Avchukir Khaisa © 2026

Purpose and Expected Learning Outcomes

PURPOSE

Build a quantitative understanding of modeling electroplating: current distribution and coating uniformity.

01 Explain the physical assumptions and governing electrochemical equations.

02 Calculate relevant kinetic, transport, and interfacial parameters.

03 Interpret simulated responses and compare them with measurements.

04 Evaluate model limitations and propose a reproducible validation plan.

Avchukir Khaisa © 2026

Lecture Trajectory and Practical Relevance



Scientific value: link measurable current, potential, concentration, or impedance to mechanistic parameters.

Applications: electroanalysis • energy conversion • electrodeposition • corrosion • process engineering

Avchukir Khaisa © 2026

Electroplating cell geometry

$$Ni^{2+} + 2e- \rightleftharpoons Ni(s)$$

Anode dissolution supplies metal ions; cathode deposition grows coating.

Geometry and electrolyte conductivity influence current distribution.

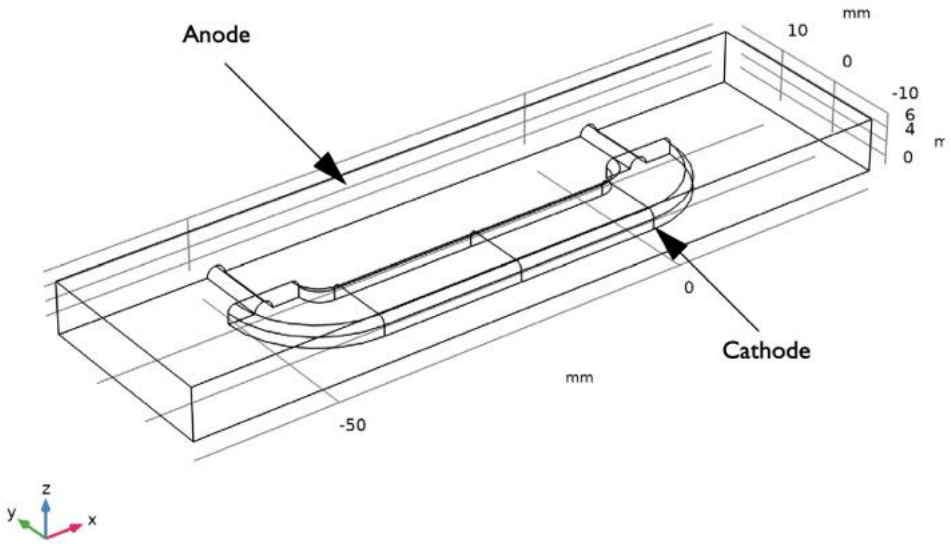

MODEL ASSUMPTIONS • EQUATIONS • MEASURABLE RESPONSE

Avchukir Khaisa © 2026

Primary current distribution

$\nabla \cdot (\kappa \nabla \phi l) = 0$

Assumes uniform conductivity and neglects electrode polarization.

Predicts geometry-controlled ohmic current focusing.

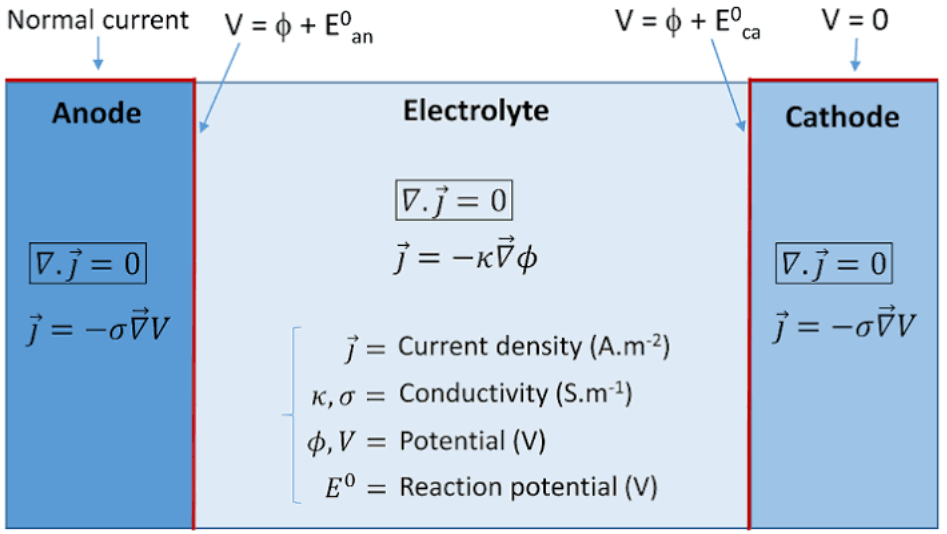

MODEL ASSUMPTIONS • EQUATIONS • MEASURABLE RESPONSE

Avchukir Khaisa © 2026

Secondary current distribution

$$j = j_0[\exp(\alpha_a F\eta/RT) - \exp(-\alpha_c F\eta/RT)]$$

Adds charge-transfer kinetics at electrode boundaries.

Useful when concentration variations are small.

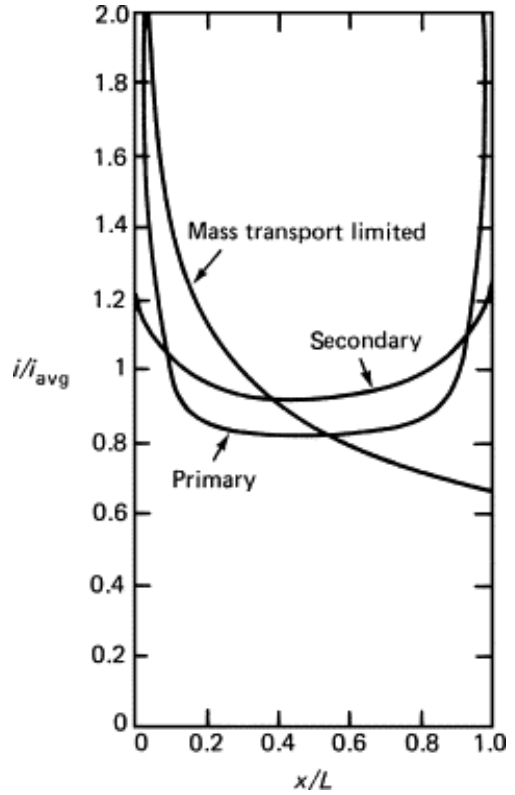

MODEL ASSUMPTIONS • EQUATIONS • MEASURABLE RESPONSE

Avchukir Khaisa © 2026

Tertiary current distribution

$$\partial c_i/\partial t + \nabla \cdot N_i = R_i$$

Includes mass transport and concentration polarization.

Needed near limiting current or under substantial depletion.

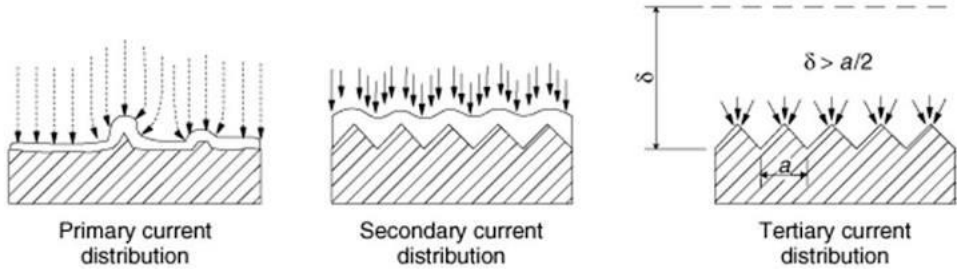

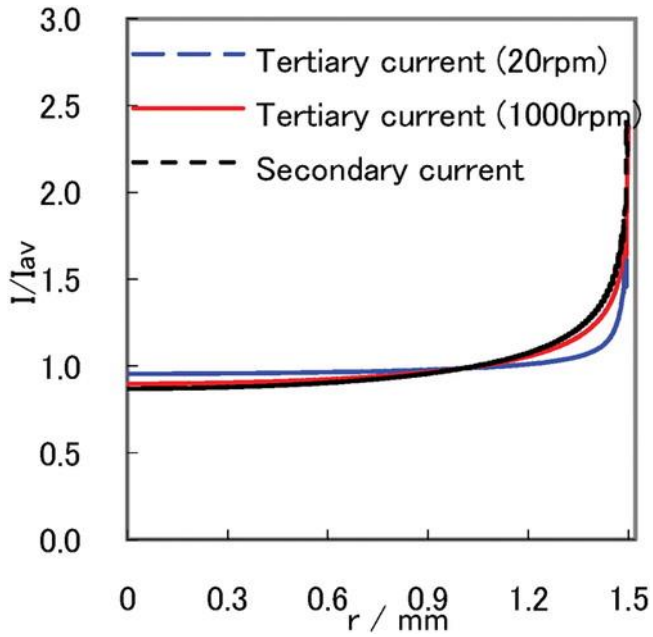

MODEL ASSUMPTIONS • EQUATIONS • MEASURABLE RESPONSE

Avchukir Khaisa © 2026

Nickel thickness prediction

$$h = \varepsilon M|j|t/(2F\rho)$$

ε is metal current efficiency; M = 0.05869 kg mol^{-1}.

Ni density ≈ 8900 kg m^{-3}; j may vary over the surface.

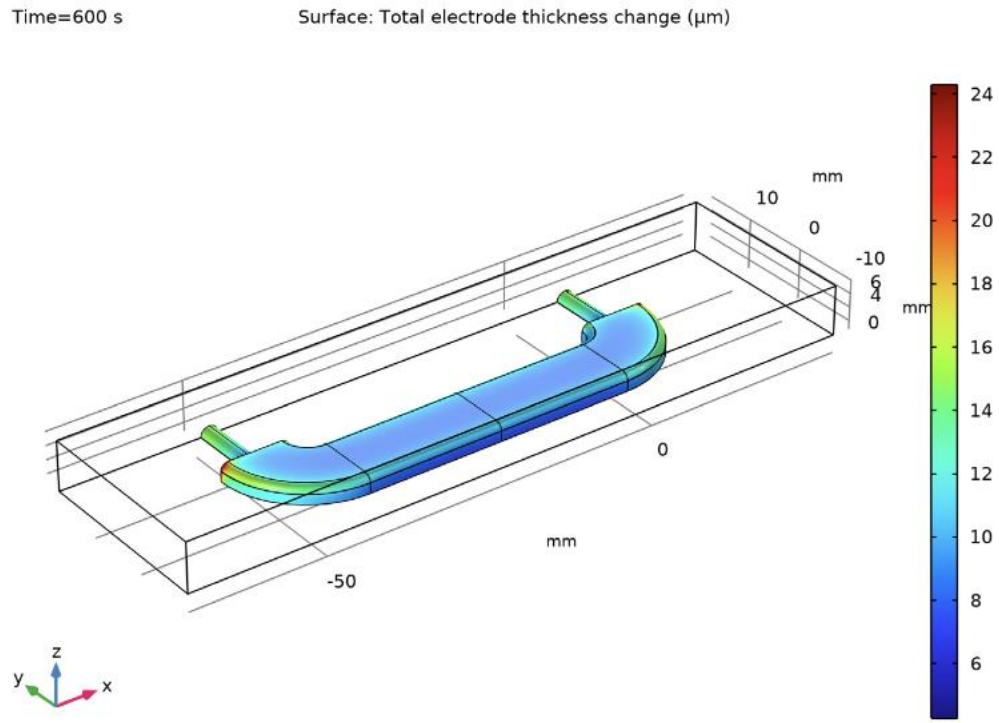

MODEL ASSUMPTIONS • EQUATIONS • MEASURABLE RESPONSE

Avchukir Khaisa © 2026

Uniformity optimization

U = hmin/hmax

Assess thickness at corners, recesses, and remote surfaces.

Optimize anode placement, shields, agitation, and current.

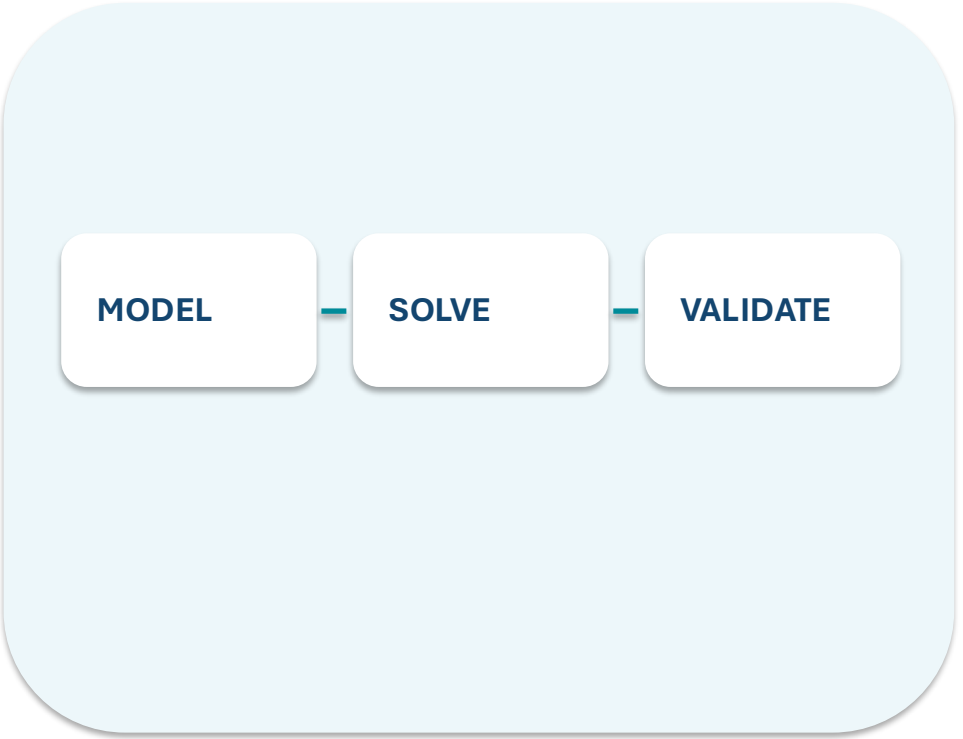

MODEL ASSUMPTIONS • EQUATIONS • MEASURABLE RESPONSE

Avchukir Khaisa © 2026

Conclusions: From Physical Mechanisms to Predictive Models

1. Electroplating cell geometry

$Ni^{2+} + 2e- \rightleftharpoons Ni(s)$

2. Primary current distribution

$\nabla \cdot (\kappa \nabla \phi l) = 0$

3. Secondary current distribution

$j = j0[\exp(\alpha a F \eta / RT) - \exp(-\alpha c F \eta / RT)]$

4. Tertiary current distribution

$\partial ci/\partial t + \nabla \cdot Ni = Ri$

5. Nickel thickness prediction

$h = \varepsilon M|j|t/(2F\rho)$

6. Uniformity optimization

$U = hmin/hmax$

Avchukir Khaisa © 2026

Homework: Quantitative and Research-Oriented Problems

CONCEPTUAL Compare the assumptions underlying “Electroplating cell geometry” and “Secondary current distribution”.

CALCULATION Given $T = 298.15$ K, $F = 96485$ C mol^{-1}, $R = 8.314$ J mol^{-1} K^{-1}, $D = 1.0 \times 10^{-9}$ m^2 s^{-1}, $c = 1.0$ mol m^{-3}, $A = 1.0$ cm^2, $n = 1$, compute a relevant transport or kinetic prediction and state assumptions.

DATA INTERPRETATION For simulated normalized signals (t/s, response): (0.2,0.82), (0.5,0.61), (1.0,0.44), (2.0,0.30), identify the trend and test a plausible physical model.

CRITICAL THINKING Predict how a tenfold change in the controlling kinetic or transport parameter changes the response; distinguish hypotheses.

RESEARCH TASK Design a COMSOL or Python model with geometry, boundary conditions, mesh-convergence test, and an experimental validation plan.

Avchukir Khaisa © 2026