Lecture 10 | Forced-Convection Electrodeposition in Rotating Cylinder Cells

Al-Farabi Kazakh National University

Department of Analytical, Colloidal Chemistry and Technology of Rare Elements

Discipline: Modeling in Electrochemistry

Educational program: 7M07103 Chemical Engineering

Lecturer: Khaisa Avchukir, PhD, Associate Professor

Avchukir Khaisa © 2026

Purpose and Expected Learning Outcomes

PURPOSE

Build a quantitative understanding of forced-convection electrodeposition in rotating cylinder cells.

01 Explain the physical assumptions and governing electrochemical equations.

02 Calculate relevant kinetic, transport, and interfacial parameters.

03 Interpret simulated responses and compare them with measurements.

04 Evaluate model limitations and propose a reproducible validation plan.

Avchukir Khaisa © 2026

Lecture Trajectory and Practical Relevance



Scientific value: link measurable current, potential, concentration, or impedance to mechanistic parameters.

Applications: electroanalysis • energy conversion • electrodeposition • corrosion • process engineering

Avchukir Khaisa © 2026

Rotating cylinder Hull cell

$$Re = \rho \omega r^2 / \mu$$

A rotating working electrode controls electrolyte hydrodynamics.

Cell geometry creates spatially varying current distribution.

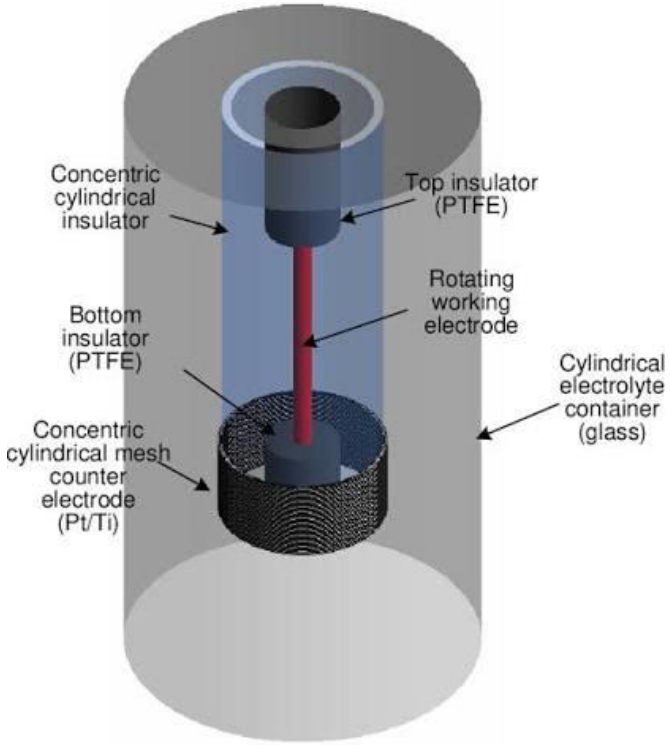

MODEL ASSUMPTIONS • EQUATIONS • MEASURABLE RESPONSE

Avchukir Khaisa © 2026

Convection–diffusion transport

$$\partial c/\partial t + v\cdot\nabla c = D\nabla^2 c$$

Fluid motion changes concentration boundary layers.

Solve velocity and species transport consistently.

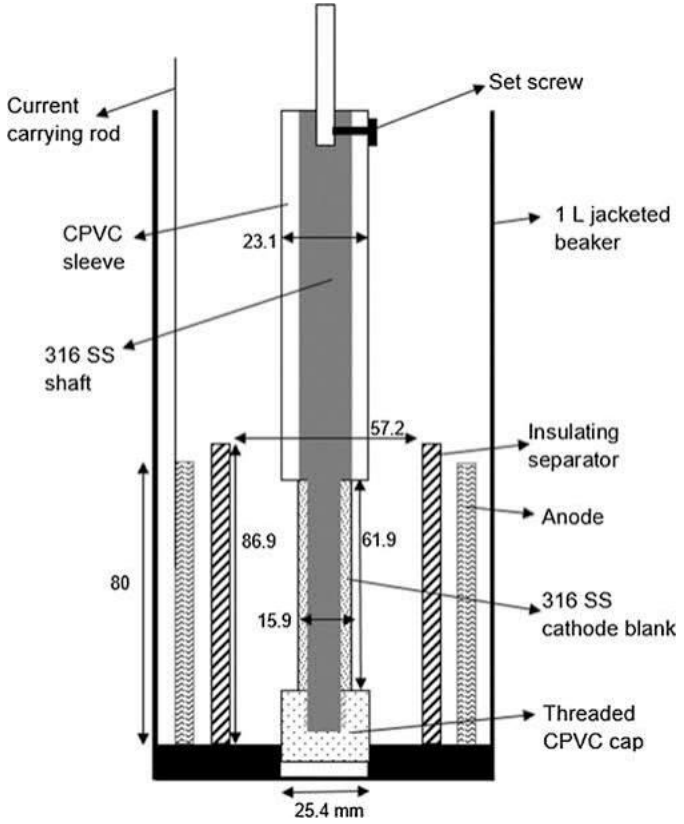

MODEL ASSUMPTIONS • EQUATIONS • MEASURABLE RESPONSE

Avchukir Khaisa © 2026

Current-distribution hierarchy

Primary → Secondary → Tertiary

Primary: ohmic geometry; secondary: add electrode kinetics.

Tertiary: include concentration gradients and mass transfer.

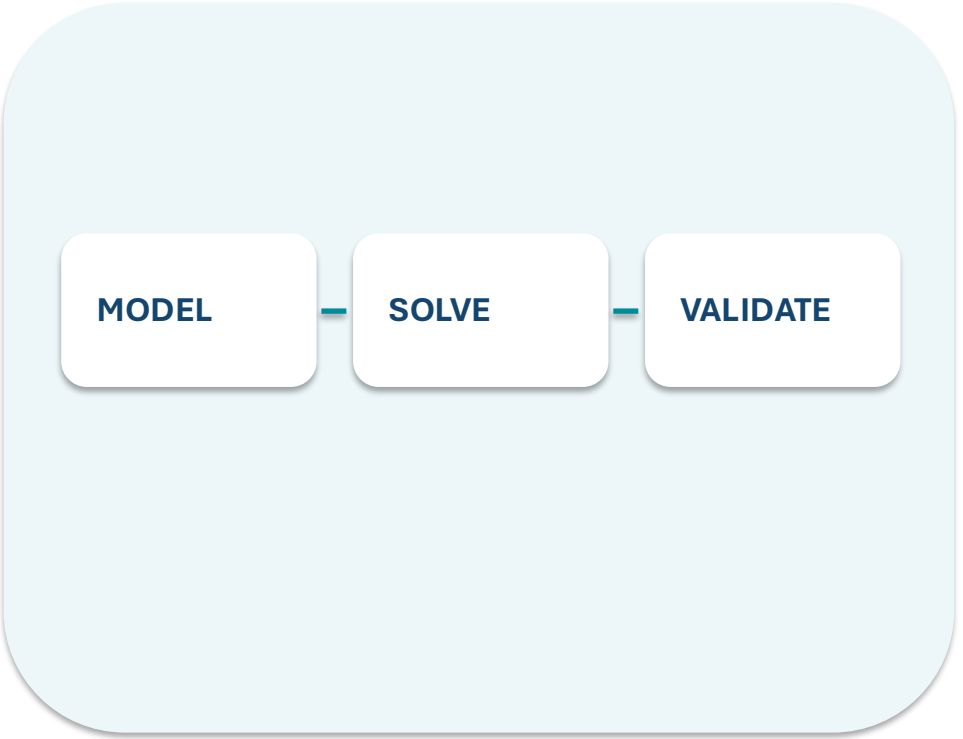

MODEL ASSUMPTIONS • EQUATIONS • MEASURABLE RESPONSE

Avchukir Khaisa © 2026

Electrode reaction and ionic flux

$Cu^{2+} + 2e^- \rightarrow Cu(s)$; $|N| = |j|/(2F)$

Flux and current are linked by Faraday's law.

Use consistent normal orientation and reaction stoichiometry.

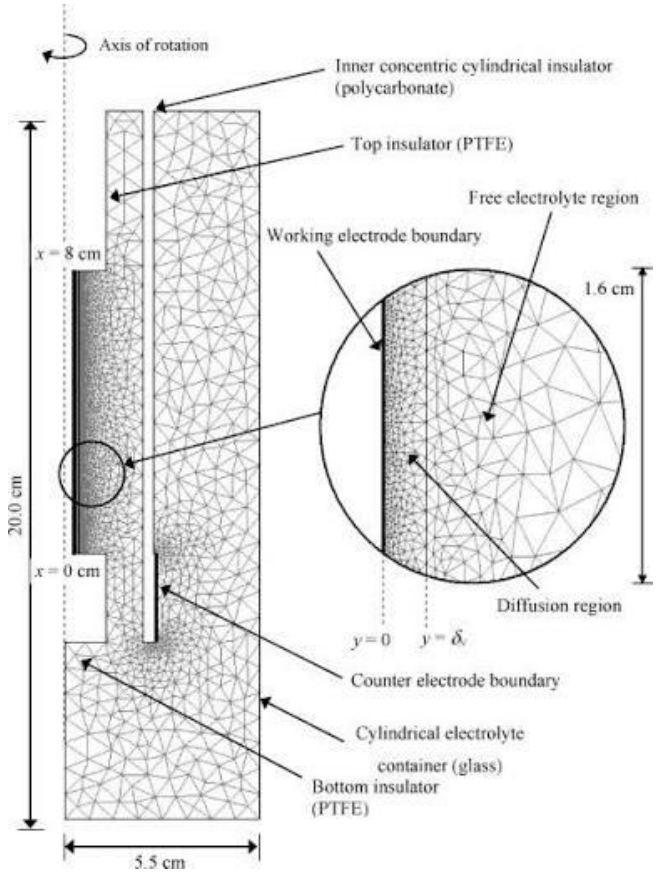

MODEL ASSUMPTIONS • EQUATIONS • MEASURABLE RESPONSE

Avchukir Khaisa © 2026

Mass-transfer coefficient

$$j_{lim} = nFkmc_b$$

The limiting current increases with hydrodynamic transport.

Sherwood correlations depend on geometry and flow regime.

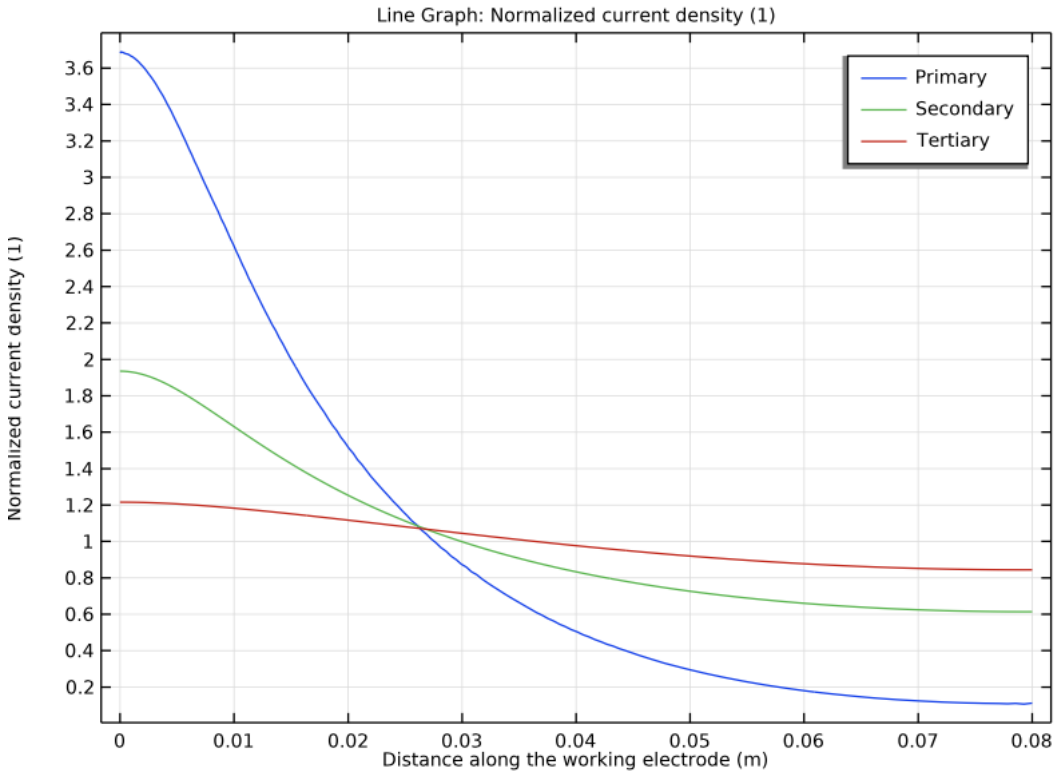

MODEL ASSUMPTIONS • EQUATIONS • MEASURABLE RESPONSE

Avchukir Khaisa © 2026

Model comparison and optimization

$$h(x,t) = M\int|j(x,t)|dt/(nF\rho)$$

Compare local current and thickness along the cylinder.

Validate against measured deposits across rotation rates.

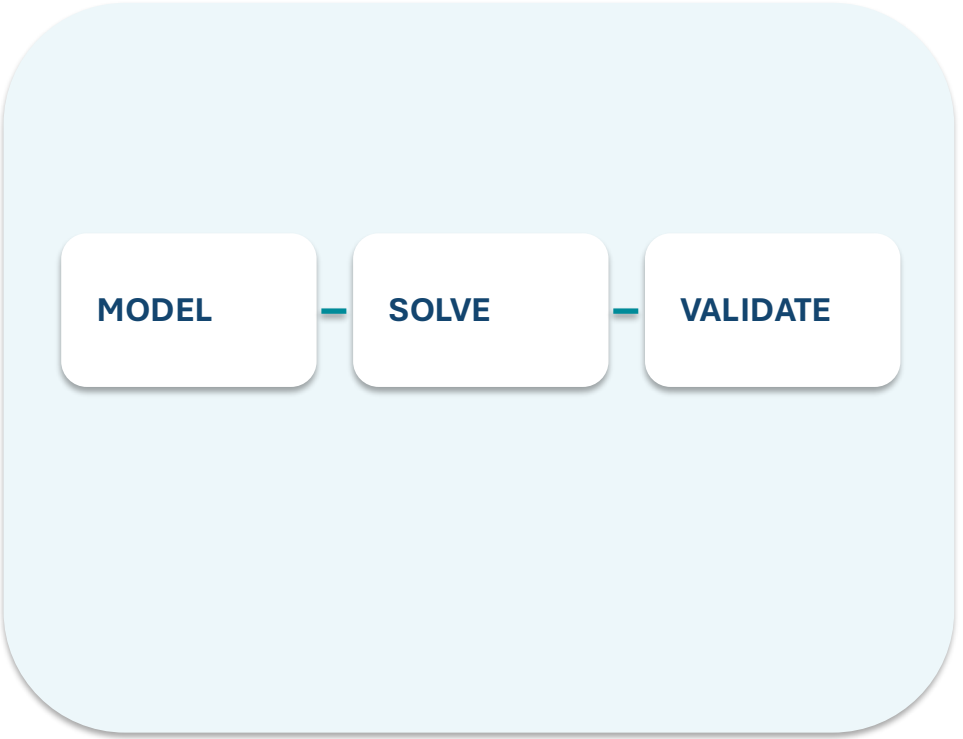

MODEL ASSUMPTIONS • EQUATIONS • MEASURABLE RESPONSE

Reference: Bard, Faulkner & White, Electrochemical Methods (3rd ed.); source lecture PDF.

Avchukir Khaisa © 2026

Conclusions: From Physical Mechanisms to Predictive Models

1. Rotating cylinder Hull cell

$Re = \rho \omega r^2 / \mu$

2. Convection–diffusion transport

$\partial c/\partial t + v \cdot \nabla c = D\nabla^2 c$

3. Current-distribution hierarchy

Primary → Secondary → Tertiary

4. Electrode reaction and ionic flux

$Cu^{2+} + 2e^- \rightarrow Cu(s)$; $|N| = |j|/(2F)$

5. Mass-transfer coefficient

$j_{lim} = nFk_m c_b$

6. Model comparison and optimization

$h(x,t) = M\int |j(x,t)|dt/(nF\rho)$

Avchukir Khaisa © 2026

Homework: Quantitative and Research-Oriented Problems

CONCEPTUAL Compare the assumptions underlying “Rotating cylinder Hull cell” and “Current-distribution hierarchy”.

CALCULATION Given T = 298.15 K, F = 96485 C mol^{-1}, R = 8.314 J mol^{-1} K^{-1}, D = 1.0×10^{-9} m^2 s^{-1}, c = 1.0 mol m^{-3}, A = 1.0 cm^2, n = 1, compute a relevant transport or kinetic prediction and state assumptions.

DATA INTERPRETATION For simulated normalized signals (t/s, response): (0.2,0.82), (0.5,0.61), (1.0,0.44), (2.0,0.30), identify the trend and test a plausible physical model.

CRITICAL THINKING Predict how a tenfold change in the controlling kinetic or transport parameter changes the response; distinguish hypotheses.

RESEARCH TASK Design a COMSOL or Python model with geometry, boundary conditions, mesh-convergence test, and an experimental validation plan.

Avchukir Khaisa © 2026